THE UNIVERSITY OF QUEENSLAND
AUSTRALIA

CREATE CHANGE

Project Presentation - Integrated Agronomic Analytics: Yield Prediction, Wheat Organ Segmentation & Decision Dashboard

Ruitao Sun 48342131

Introduction

Background

Wheat provides ~20% of global calories, contributing over A$10 billion annually in Australia.

Yield outcomes depend on **complex, non-linear interactions** among **climate, cultivar, and management practices**.

Traditional linear or simulation models often fail to capture these relationships or require heavy computation.

Motivation

Need for a **scalable, interpretable system** to link **environmental conditions and plant traits** to yield.

Combining **Machine Learning (ML)** and **Computer Vision (CV)** enables both **predictive analytics** and **phenotypic understanding** at multiple scales.

Literature Review

Traditional ML models (RF, SVR, GB) effectively handle non-linear and heterogeneous features with low computational cost (Rashid et al., 2021).

RF models integrating NDVI and weather data achieved $R^2 \approx 0.86$ in Australian studies, confirming RF as a *strong, interpretable baseline* (Pang et al., 2022).

Multi-source and leakage-resistant approaches improve generalization across years and regions (Voinarovska et al., 2023).

U-Net excels at identifying fine plant structures with efficient encoder–decoder design (Singh et al., 2025).

DeepLabV3+ captures precise organ boundaries with Atrous Spatial Pyramid Pooling (ASPP) and decoder refinement (Chang et al., 2023).

SegFormer (Transformer-based) handles imbalanced and cluttered canopy scenes effectively with feature reweighting and augmentation (Deng et al., 2022).

Objective

This project builds:

- **ML pipeline:** robust, explainable yield prediction (R^2/RMSE/MAE).
  - Build a **reliable yield prediction model** using climatic and trial features.
  - Identify **key environmental drivers** (e.g., rainfall, Tmax, evaporation).
  - Provide **interpretable insights** for agronomic decision-making.
  - Enable **scalable retraining and visualization** for future datasets.
- **CV pipeline:** segment wheat organs from field images using deep learning, compare model performance **(U-Net, SegFormer, DeepLabV3+),** and fine-tune the best architecture to produce accurate, interpretable visual phenotyping results.
- **Dashboard:** Integrate metrics for stakeholder interpretation.

Dataset

Original Data

- **Plot-level Data** (~19 000 records x 29 columns for year 2020):

  Kg/Plot, Harvest Length, Harvest Width, CultivarID

- **Daily Weather Data** (SILO): Rainfall, Max/Min Temperature,

  Radiation, Evaporation

Sample Data

Name	State	RegionName	CultivarID	Kg/Plot	TotalRain	TotalEvap	TotalRadn	AvgTmax	AvgTmin
Wheat	WA	Agzone2	8e5687e2	5.544	170	1081	3386.2	23.2725	9.24037
Wheat	WA	Agzone2	d7c72809	5.894	170	1081	3386.2	23.2725	9.24037
Wheat	VIC	Mallee	98be175f	5.648	191.7	599.5	2648.4	20.0271	6.58594
Wheat	VIC	Mallee	da90fdf2	5.762	191.7	599.5	2648.4	20.0271	6.58594
Wheat	NSW	S/W	90ef635b	6.01	299.5	585.3	2713	19.7107	6.53096
Wheat	NSW	S/W	8bb6fe84	5.825	299.5	585.3	2713	19.7107	6.53096
Wheat	SA	Mid North	614f4f0d	4.64	279.4	920.2	3021.9	19.3029	6.39559
Wheat	SA	Mid North	ca72268b	5.68	279.4	920.2	3021.9	19.3029	6.39559
Wheat	QLD	SEQ	0fc58940	8.467	204.9	671.7	2622.8	23.6595	8.02215
Wheat	QLD	SEQ	b7c2ef08	8.987	204.9	671.7	2622.8	23.6595	8.02215

Engineered Features

- **Seasonal Aggregates:** (from sowing → harvest)
  - Rainfall (mm) – Total rainfall
  - Evaporation (mm) – Total evaporation
  - Solar Radiation (MJ/m²) – Total Radiation
  - Vapor Pressure (hPa) – mean daily Vapor Pressure
  - Humidity at Tmax/Tmin (%): mean RH at daily extremes
  - Mean Daily Max/Min Temp (°C) – average of daily T_{max}/T_{min}

Data Ingestion and Data Preprocessing

Data Combination

- Loaded Plot-level data and Seasonal climate aggregates
- Merged keys: Year, TrialCode, CultivarID, RegionName, Row, Range

Standardization

- Standardize numerical features

Data Imputation

- Drop columns > 30 % missing
- Median imputation for numerical data within each group
- Impute with most frequent value for categorical data within each Group

Methodology - Linear Regression

Principal Component Analysis

Purpose: Reduce dimensionality and handle correlated variables.

- Transforms correlated features into orthogonal principal components.
- Top 10 PCs capture ~95% of variance → preserve key information.
- Benefits: Less noise, reduced overfitting, and mitigated multicollinearity.

Linear Regression using PC1 and PC2

Data split	*80 % train / 20 % test*
R^2	*0.243*
RMSE	*2.585 kg/plot*
MAE	*2.150 kg/plot*

Model Evaluation

$$R^2 = 1 - \frac{\sum_i (y_i - \hat{y}_i)^2}{\sum_i (y_i - \bar{y})^2}$$

The R2 indicates proportion of the total variance in the observed data that can be explained by Random Forest model predictions.

$$\mathrm{RMSE} = \sqrt{\frac{1}{n}\sum_{i=1}^{n}(y_i - \hat{y}_i)^2}$$

The Root Mean Squared Error is calculated by square-root of the mean value of the squared prediction errors. Since errors are squared before averaging. RMSE will penalize large errors more heavily than small ones.

$$\mathrm{MAE} = \frac{1}{n}\sum_{i=1}^{n}|y_i - \hat{y}_i|$$

Mean Absolute Error calculates the average of absolute prediction errors.

Captures only 24% of yield variability → suggests strong non-linear effects.

Linear Regression (with PCA) offers a baseline but explains limited yield variance — non-linear models are required to capture complex climate–yield relationships.

Methodology – ML pipeline

Stage 1 – Data Aggregation & Cleaning
Merge NVT trial data with SILO weather data → handle missing values/outliers → compute seasonal and agronomic features (rainfall, temperature, radiation, evaporation).

Stage 2 – Pre-processing
Standardize numeric features → encode categorical variables → split into **train/test** sets.

Stage 3 – Model Development
- Linear Regression (with PCA)
- Random Forest (main model)
- Gradient Boosting / SVR

Stage 4 – Hyperparameter Tuning
Optimize parameters via **Cross Validation**→ choose best-performing configuration.

Stage 5 – Evaluation & Visualization
Compare predicted vs. actual yields → analyse **R^2**, **RMSE**, **MAE** → visualize feature importance & residuals.

Machine Learning Results

Model Comparison

	R^2	RMSE(kg/plot)	MAE(kg/plot)
Random Forest	0.951	0.648	0.484
SVR	0.943	0.698	0.525
Gradient Boosting	0.947	0.669	0.500

RF can capture more complex and non-linear relationship by ensemble multiple decision trees, handles feature interaction automatically.
SVR also performs well but needs carefully scaling and parameter tuning.
GB also has competitive accuracy but prone to overfitting and higher computational cost.

Methodology – Random Forest

Architecture

Ensemble of **decision trees** trained on bootstrapped samples.

Random feature sampling at each split → diverse learners.

Final output = **average of all tree predictions**.

Model Pipeline & Hyperparameters

Preprocessing: Data imputation → standardization.

Model tuning: Nested cross-validation (GridSearchCV).

Final training: Best parameters retrained on full dataset.

Suitability

- Captures non-linear climate–yield interactions.
- Robust to noise, outliers, and missing values.
- Provides feature importance for interpretability.
- Computationally efficient vs. deep learning models.

Cross-validation Result:

Best RMSE: 0.701 kg/plot

Final test performance:

- ***R^2*** = 0.951
- ***RMSE*** = 0.648 kg/plot
- ***MAE*** = 0.484 kg/plot

Methodology – Segmentation

Develop baseline segmentation models to identify key wheat organs from images.

Compare multiple architectures — U-Net, SegFormer, and DeepLabV3+ — to find the best-performing model in terms of:

- *Global Accuracy (GA)*
- *Balanced Accuracy (BA)*
- *Mean Intersection over Union (mIoU)*
- *Per-class accuracy*

Fine-tune the best model (DeepLabV3+) to handle class imbalance and improve stem segmentation.

Generate interpretable, high-quality visual outputs for use in the Tableau dashboard.

Dataset & labels: global wheat organ segmentation (GWFSS)

classes: background, head, stem, leaf

resize 512×512, 70/15/15 split.

Architectures:

U-Net (ResNet34), SegFormer (MiT-B2), DeepLabV3+ (ResNet-101).

Segmentation – Evaluation Metrics

Global Accuracy (GA): Overall pixel correctness.

$$GA = \frac{\#\ Correct\ Pixels}{\#\ All\ pixels}$$

Balanced Accuracy (BA): Mean of **per-class** accuracies (gives each class equal weight; mitigates class imbalance).

$$BA = \left(\frac{1}{C}\right) * \Sigma_{\{c=1..C\}}\left[\frac{(\#\ correct\ pixels\ of\ class\ c)}{(\#\ ground-truth\ pixels\ of\ class\ c)}\right]$$

Mean IoU (mIoU): Average, across classes, of intersection-over-union (penalizes both over- and under-segmentation).

$$mIoU = \left(\frac{1}{C}\right) * \Sigma_a \left\{\frac{P_c \cap G_c}{P_c \cup G_c}\right\}$$

Per-class Accuracy: Correct pixels of class cc divided by ground-truth pixels of class cc.

$$Per - class\ Acc\ (class\ c) = \frac{(\#\ correct\ pixels\ of\ class\ c)}{(\#\ ground - truth\ pixels\ of\ class\ c)}$$

Fine-tuning DeepLabv3+

Goal:

Adapt a pretrained DeepLabV3+ (ResNet-101 backbone) for wheat organ segmentation,
Trying to improve detection of minority classes—especially *stems*.

Approach:

•**Transfer Learning:** Start from pretrained ImageNet weights; replace classifier head for wheat dataset.

•**Weighted Cross-Entropy Loss:** Assign higher weights to under-represented classes (like stems) to counter class imbalance.

•**Early Stopping:** Prevents overfitting when validation loss plateaus.

Outcome:

Balanced accuracy increased from **0.75** → **0.81**, and **Stem Accuracy improved from 0.41** → **0.62**, showing better learning on minority structures with minimal loss in overall accuracy.

Segmentation – Results

Metric	DeepLabV3	DeepLabV3+ (Baseline)	DeepLabV3+ (Fine-Tuned)	UNet (ResNet34)	SegFormer (MiT-B2)
Test Loss	0.3795	0.4204	0.6321	0.4848	0.3384
Global Accuracy	0.8685	0.8493	0.8435	0.8172	0.8802
Balanced Accuracy	0.7522	0.7505	0.8068	0.6443	0.7566
Mean IoU (mIoU)	0.6332	0.6189	0.6203	0.5201	0.6586
Background Accuracy	0.8541	0.8176	0.8628	0.852	0.8052
Head Accuracy	0.8799	0.8838	0.9064	0.8261	0.9037
Stem Accuracy	0.3719	0.4095	0.6242	0.0459	0.371
Leaf Accuracy	0.9031	0.8913	0.8336	0.8531	0.9465

Key Observations:

1. ***SegFormer*** achieves the highest overall accuracy (mIoU = 0.6586), producing the most consistent segmentation quality.
2. ***Fine-tuned DeepLabV3+*** improves Balanced Accuracy (BA) and Stem Accuracy, handling minority classes better.
3. ***UNet*** performs reliably on leaf and background, but struggles with stems.
4. **DeepLabV3+** achieved the best trade-off between accuracy and robustness, particularly improving minority class detection

Segmentation – Qualitative Examples for fine-tuned DeepLabv3+

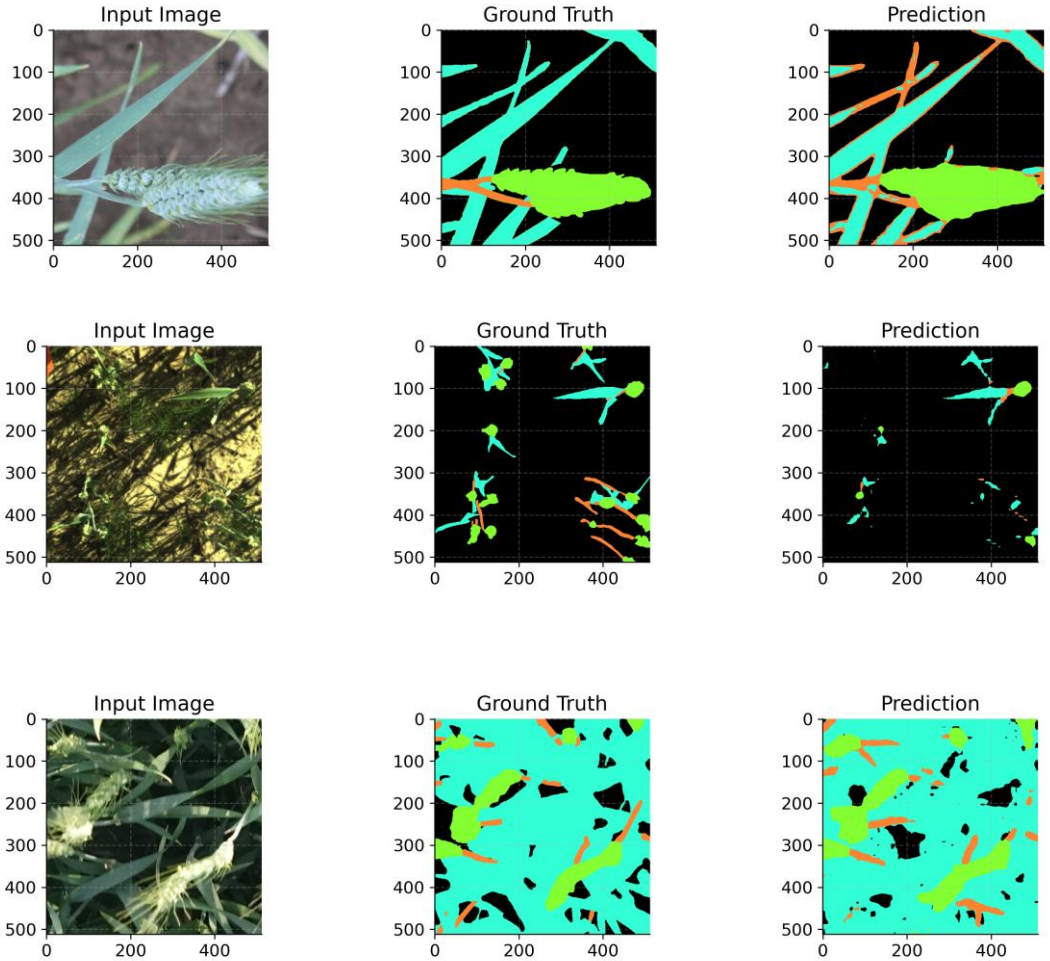

The **input image** is the original field photo.
The **ground truth** is the manually labelled mask showing background, head, stem, and leaf.
The **prediction** shows how well the model detected each part using the same colour scheme.

Colour Scheme
Background: Black
Head: Bright Green
Stem: Orange
Leaf: Cyan

Heads & leaves: clear segmentation
Stems: smoother and more complete after fine-tuning
Thin/overlapping parts: still challenging to capture

Why DeepLabV3+ better?

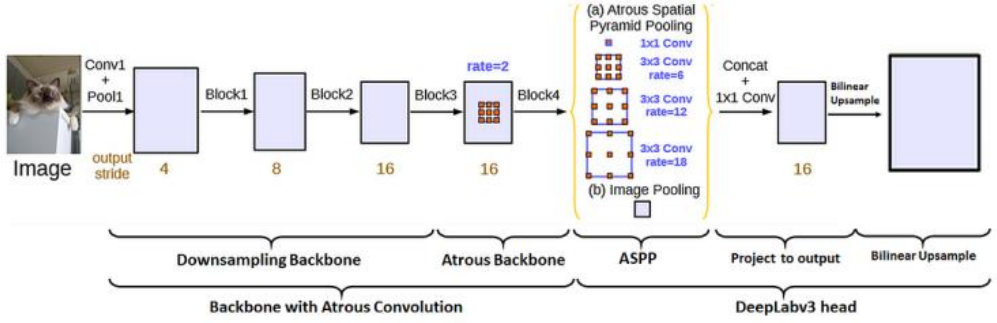

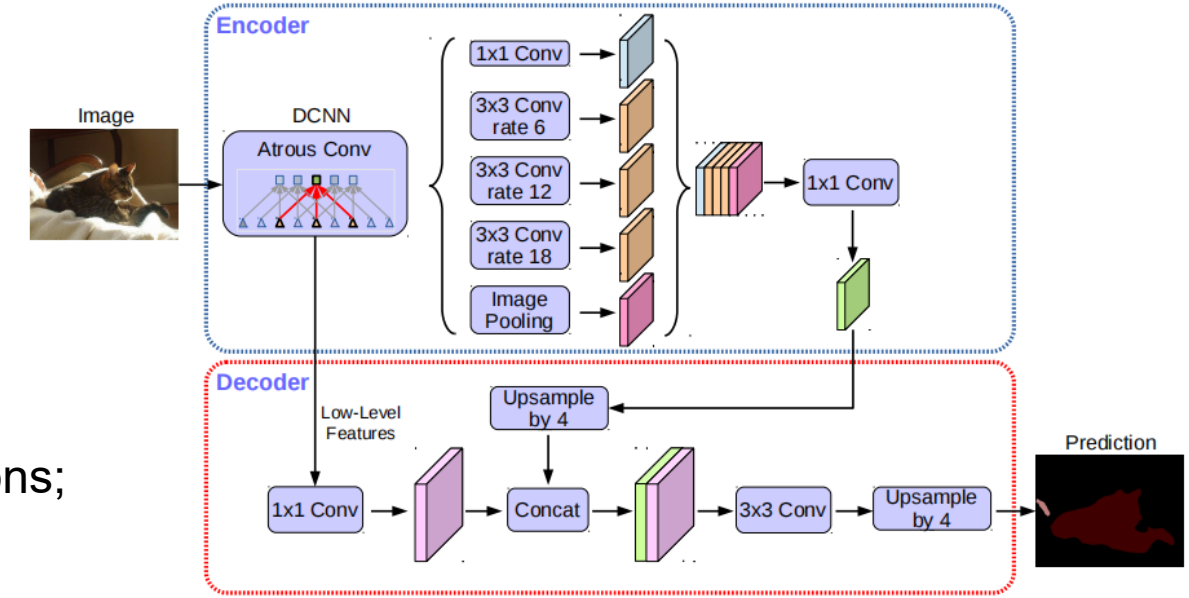

U-Net: Simple encoder–decoder with skip connections; effective but limited global context.
SegFormer: Transformer backbone offers strong semantics but can blur thin structures; less precise on small regions like stems.
DeepLabV3+ combines global context (ASPP) + boundary precision (decoder) → balanced performance across all organ classes.

Capstone Presentation

North East, North Central (VIC) and South East (NSW) support more cultivars to reach high yield because of adequate water, benign temperatures and favorable atmospheric demand	Cultivar 0055a570 (wins in Mid North, North Central, North East, South East) because of benign and balanced environment. Cultivar 8f2f470b (wins in Agzone1-5) because of its drier and hotter Mediterranean conditions	This Dashboard shows which cultivar types are consitent performer across regions and which regions support more cultivars performing at high yield.	Single factor Yield Dashboard	Multifactor Yield Model	Machin

Cultivar ID

(All)

Region Environment Summary

State	Region Na..	Evaporatio..	Cool Nights ..	Humidity Le..	Radiation L..	Rainfall Lev..
NSW	North East	Low	Medium	Medium	Medium	High
	North West	Low	Medium	Medium	Medium	Medium
	South East	Medium	High	High	High	High
	South West	Low	Medium	Medium	Medium	Medium
QLD	Central Que..	Low	Low	Low	Low	Low
	South East ..	Medium	Low	Low	Medium	Low
	South West..	Low	Medium	Low	Low	Low
SA	Lower Eyre ..	High	Low	High	High	High
	Mid North ..	High	High	Medium	High	High
	Murray Mal..	Medium	High	Low	Medium	Low
	South East ..	Medium	High	High	High	High
	Upper Eyre ..	High	Low	Low	Low	Medium
	Yorke Penin..	High	Medium	High	High	Medium
VIC	Mallee Regi..	Medium	High	Low	High	Low
	North Centr..	Low	High	Medium	High	Medium
	North East ..	Low	High	High	High	High
	Wimmera R..	Low	High	High	Medium	Medium
WA	Agzone 1 (N..	High	Low	Low	Low	Medium
	Agzone 2 (C..	High	Low	Medium	Low	Low
	Agzone 3 (S..	Medium	Medium	High	Medium	High
	Agzone 4 (E..	High	Low	Low	Low	Low
	Agzone 5 (N..	Medium	Medium	Medium	Low	Low
	Agzone 6 (S..	High	Low	High	Low	High

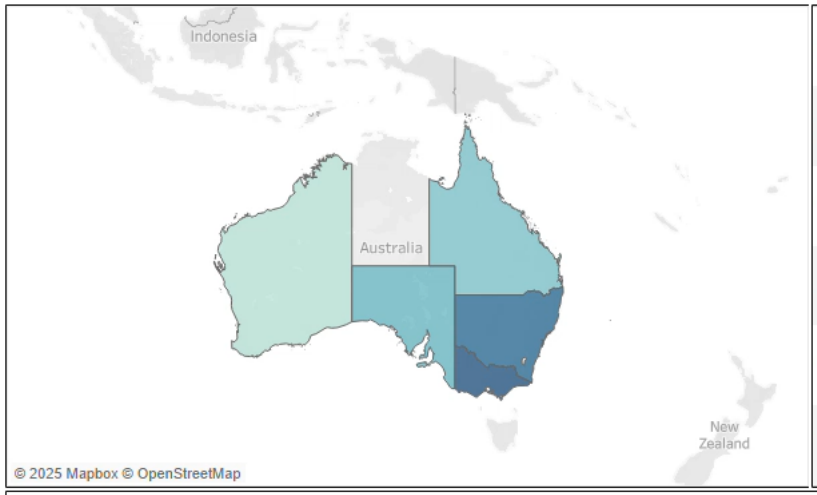

Average Daily Max Temp (°C)	21
Average Daily Min Temp (°C)	8
Total Evaporation (mm)	680
Average Vapor Pressure	11
Total Radiation (MJ/m²)	2,617
Total Rainfall (mm)	218

Region Yield by Cultivar

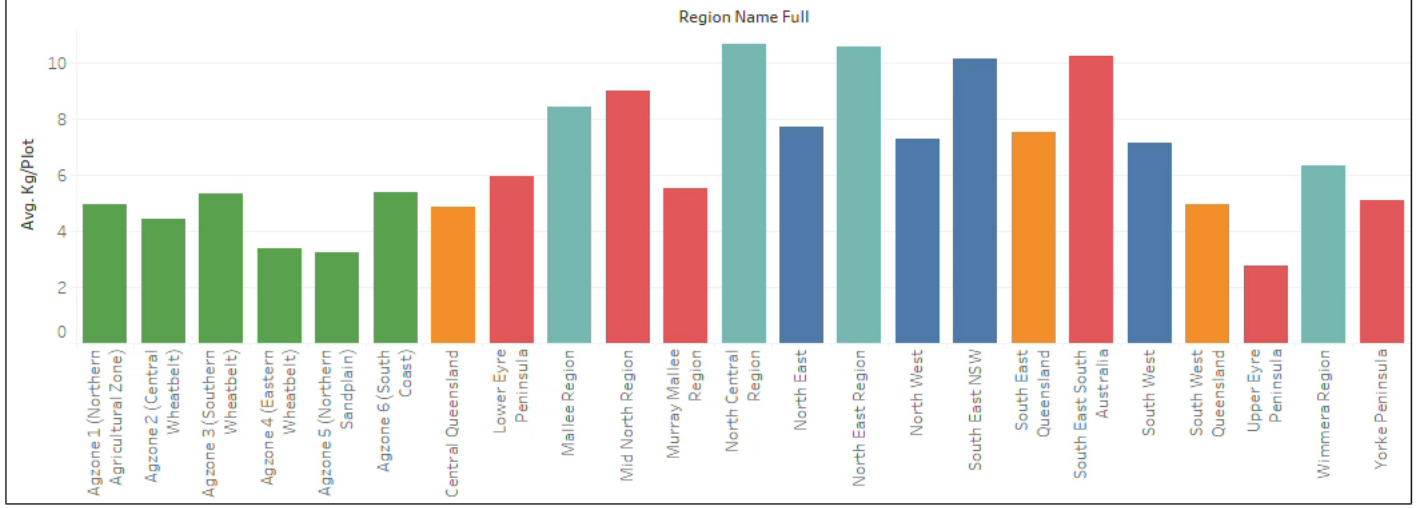

Summary

Developed two pipelines:

1. Machine Learning (RF, SVR, GB) for regional wheat yield prediction
2. Computer Vision (U-Net, SegFormer, DeepLabV3+) for organ-level segmentation.

Key Limitations:

Data imbalance in both yield and image segmentation (minority classes like stems).

Spatial resolution differences between regions may reduce yield model generalization.

Independent ML and CV pipelines — not yet fully integrated for joint feature learning.

Privacy:

Data used under institutional and open-data agreements (NVT/SILO).

ML runs locally and CV runs in rangpur (HPC) to ensure data privacy

Summary

Future Work:

Integrate CV-derived traits (head–leaf ratio, stem density) into ML yield models.

Explore **multi-season transfer learning** to improve generalization.

Key Takeaways:

- **Random Forest** remains a **robust baseline** for yield prediction—accurate and interpretable.
- **Fine-tuned DeepLabV3+** improves organ-level accuracy, especially for stems.
- Dashboard provide data-driven crop analysis that can benefit decision-making.

THE UNIVERSITY OF QUEENSLAND
AUSTRALIA

CREATE CHANGE

Thank you

Ruitao Sun
Master of Data Science
s4834213@student.uq.edu.au